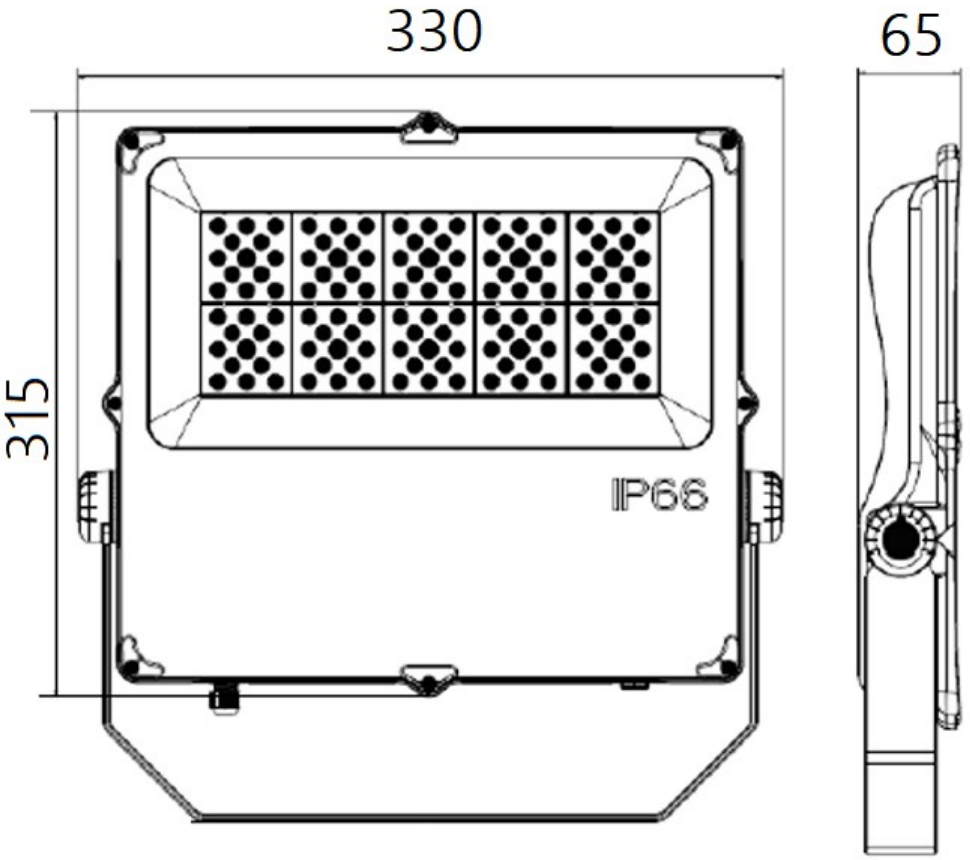

LED Flood Light 200 Watt

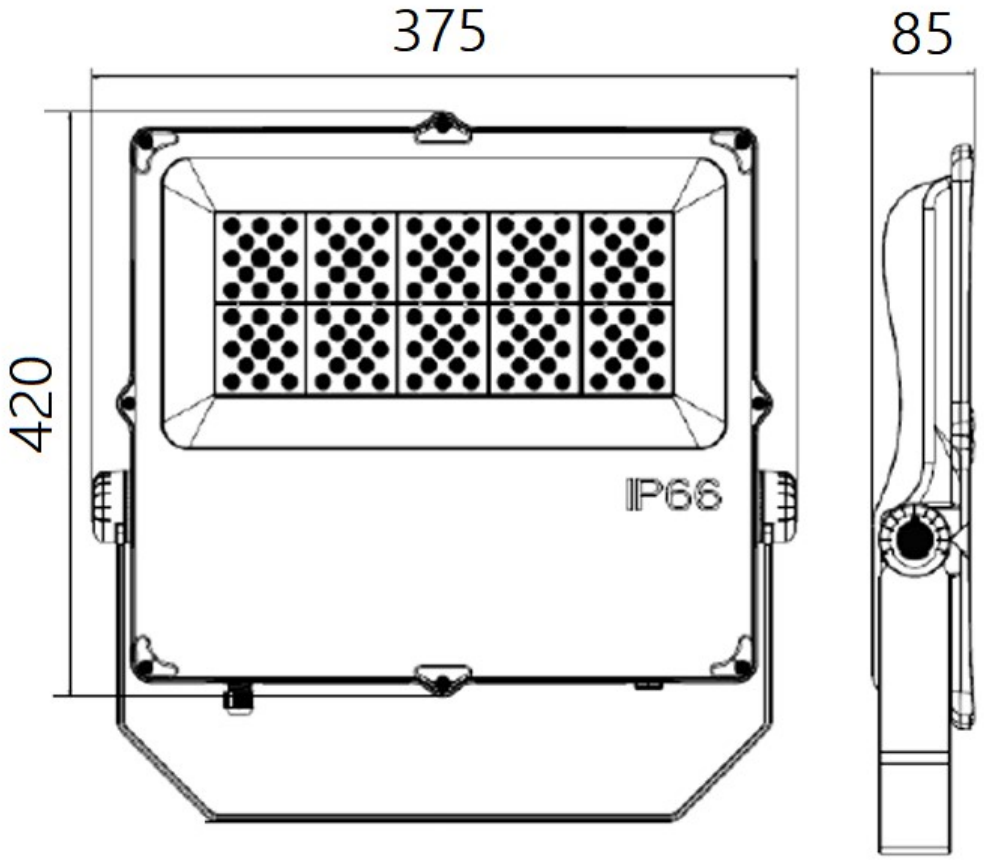

LED Flood Light 300 Watt

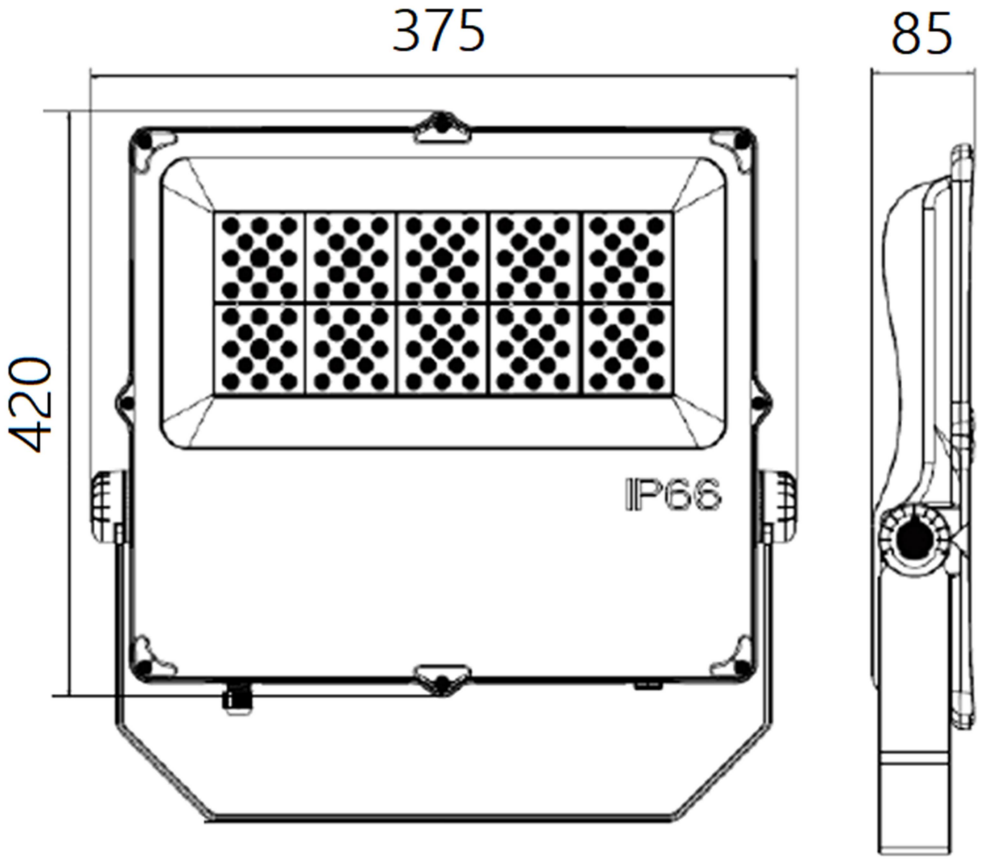

LED Flood Light 400 Watt